Arithmetic Circuits I

Submitted by:

Name	ID
Nawaf Alabdi	B00093759
Ali Abdelatief	B00099836

Submitted to:

Ms. Salsabeel Shapsough

Lab Instructor

American University of Sharjah

College of Engineering

Submitted on:

20/10/2024

Abstract

In this lab we will design two circuits that solves two problems one that converts a binary number to its 2's complement form, and one that compares two binary numbers that are already in the 2's complement form. Design started by filling out the defining truth table or Karnaugh map and find the corresponding Boolean function.

Introduction

In this lab, we will apply our knowledge on circuit design (creating a truth table, extracting the minterms, simplifying them and designing a circuit) to create a four bit Two's complementor circuit. The circuit takes 4 inputs representing the input bits, and outputs its 2's complement. After that, we will create another circuit that works as a comparator. The circuit takes in two 2-bit numbers in 2's complement form and outputs true if the first number is larger than the second number.

Theoretical Background

The 2's complement is a numbering standard used to represent signed binary numbers. In this numbering system, the most significant bit is used to indicate the sign of a number. Zero being positive, and 1 being negative.

The process of converting 2's complement representation into a signed number is simple.

We first look at the most significant bit; If the digit is zero, we do a standard binary-to-decimal conversion. If the digit is one, we apply 2's complement to obtain the positive version of the number, then add a negative sign.

The 2's complement operation consists of two steps: inverting all the digits, and adding +1 to the number, doing this returns the "complement" of the number.

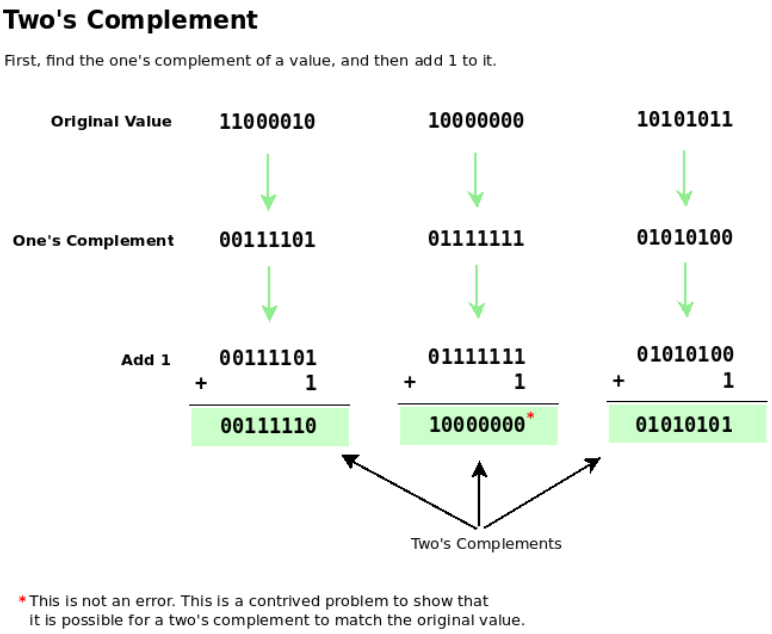

Figure 1 an example https://delightlylinux.wordpress.com/2014/10/13/binary-lesson-12-ones-complement-and-twos-complement/

A comparator circuit is a circuit that compares values (which may be represented using several input digits) using a specific comparison operation, like the (>) operation in this example, and return the result of the comparison operation on the inputs. In this example, we

built a 2-bit number comparator that indicates whether the first 2-bit number is greater than the second 2-bit number when converted into signed decimal from 2's complement form.

Experimental work, Results and Discussion

Lab Assignment:

Exercise 1:
The Two's complement of a binary number is equivalent to taking the one's complement and then adding one. Design 4-bit combinational circuit 2's complementor. The input is the binary number ranging from 0000 to 1111. The output is the 2's complement of the input binary number.

- Build the truth table and design your circuit.

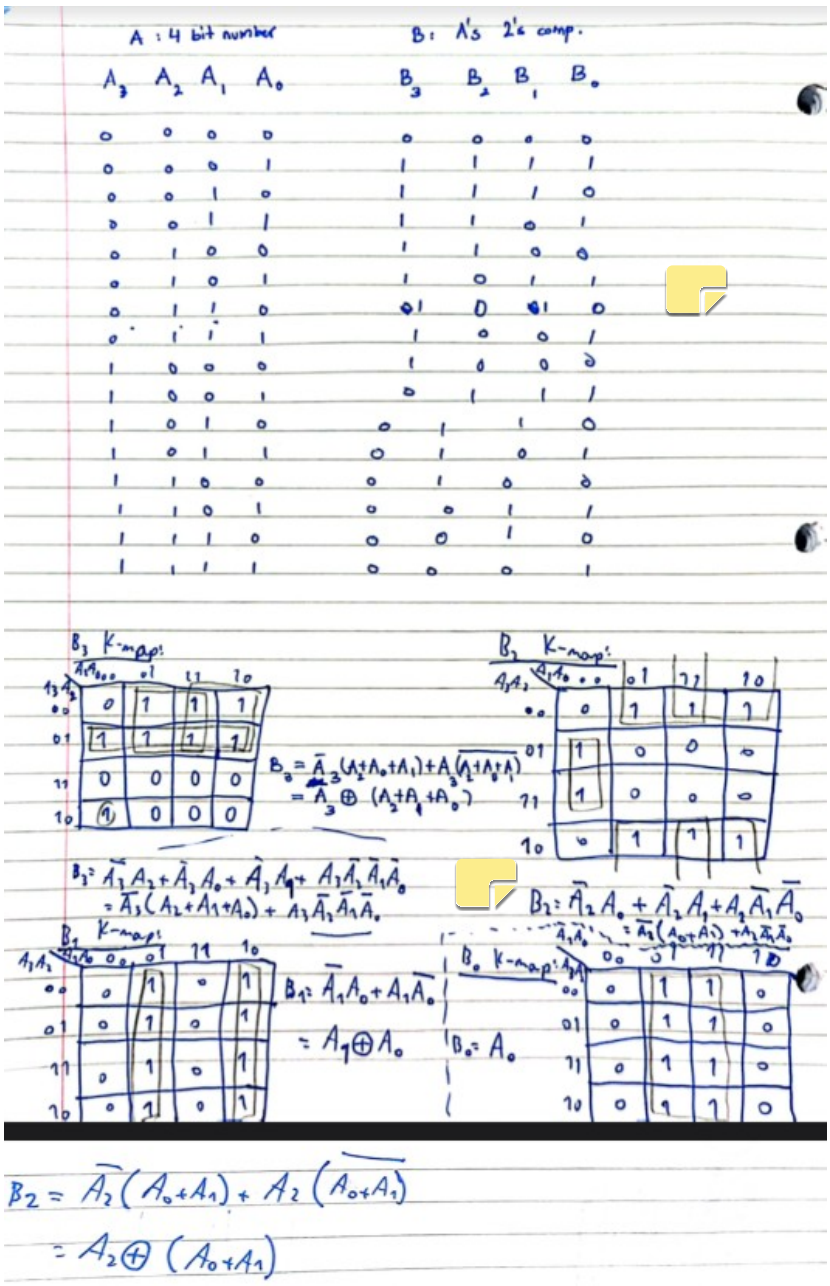

- Simulate your circuit.

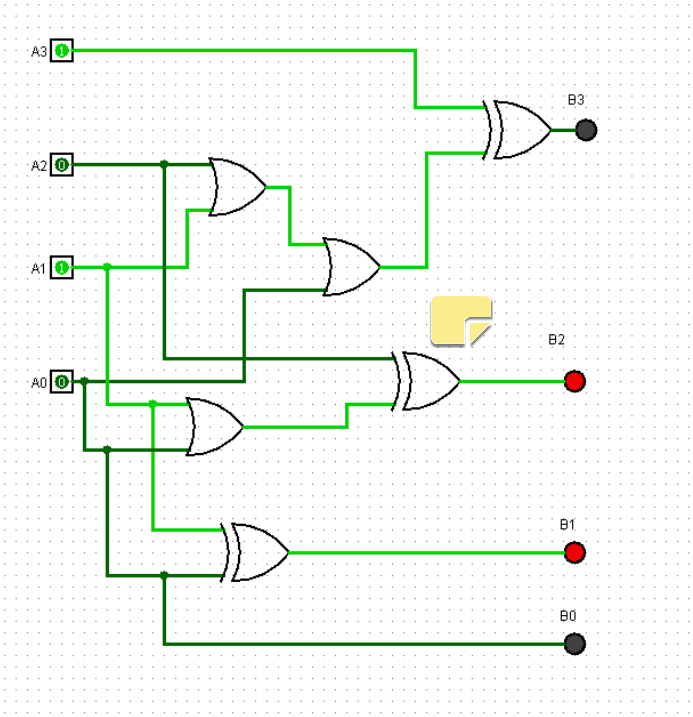

- Implement and verify your operation.

- 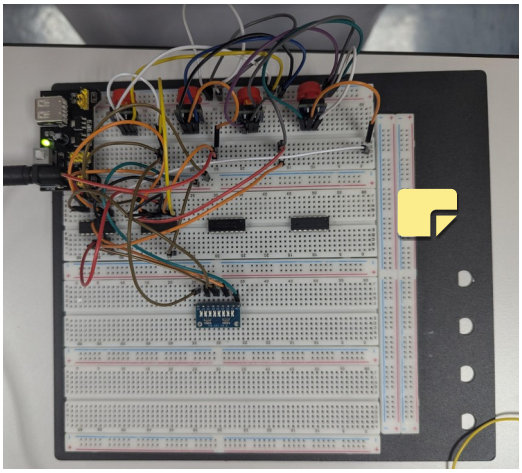

Exercise 2:
Design a signed 2-bit number comparator which outputs true if A is bigger than B, and false otherwise.

Signed Binary	Decimal
00	0
01	1
10	-2
11	-1

- Complete the truth table and design your circuit.

A1	**A0**	**B1**	**B0**	**A>B**
0	0	0	0	0
0	0	0	1	0

0	0	1	0	1
0	0	1	1	1
0	1	0	0	1
0	1	0	1	0
0	1	1	0	1
0	1	1	1	1
1	0	0	0	0
1	0	0	1	0
1	0	1	0	0
1	0	1	1	0
1	1	0	0	0
1	1	0	1	0
1	1	1	0	1
1	1	1	1	0

- Simulate your circuit.

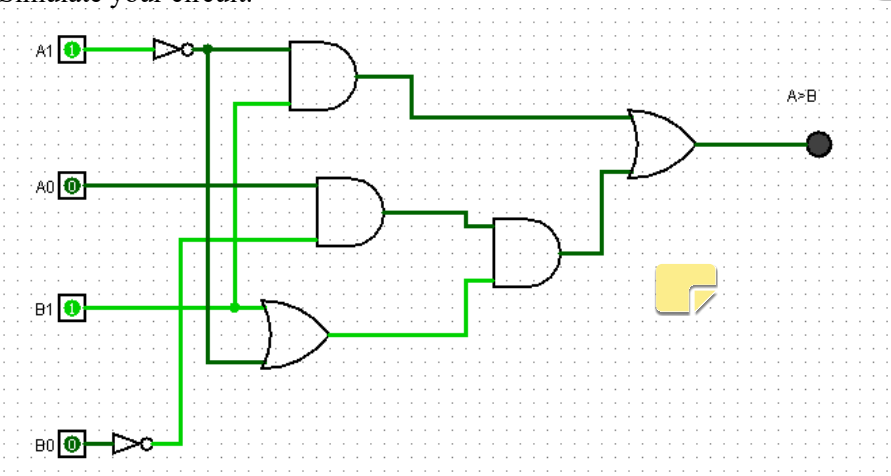

- Implement and verify your operation on Tinkercad.

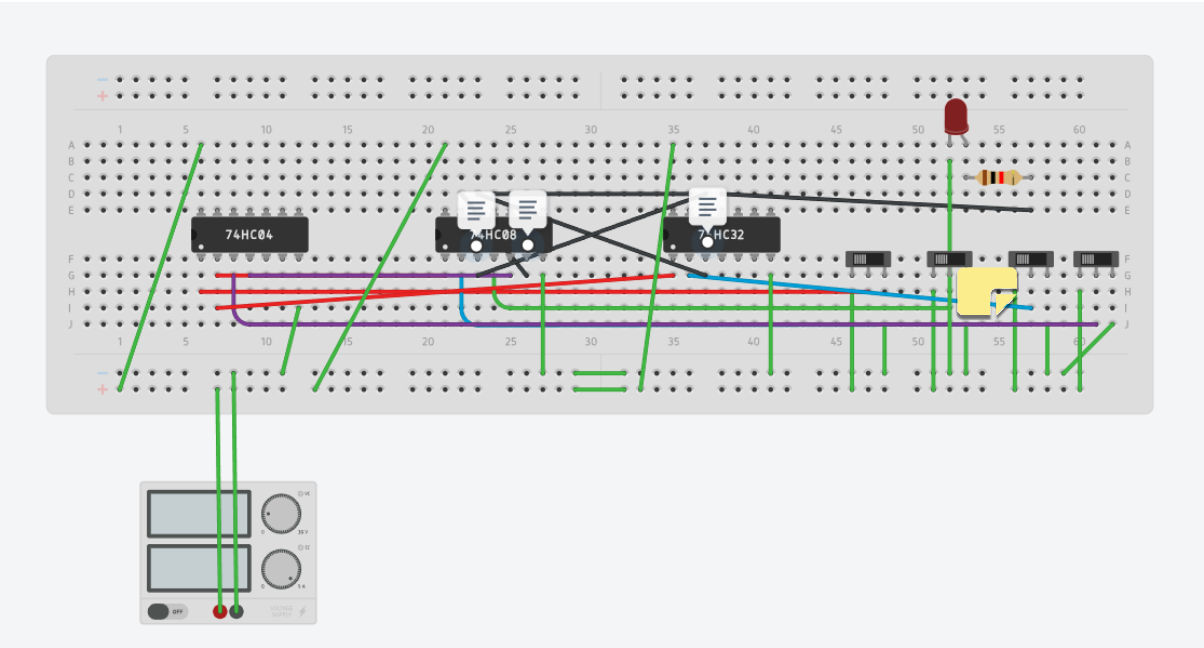

(Please check the attached .BRD file on the submission, or check visit this link https://www.tinkercad.com/things/bAYgKu1EI05-lab-6-comparator-circuit?sharecode=V8W-qmcZxuV39mmvXnyvq-g0Rf52mThJF_nWTZ7bjeQ

)

Conclusion

In this lab, we went over the concepts of bit arithmetic and how to implement them using logic circuits. We applied the design process to build a 4-bit 2's complementor, as well as a 2-bit comparator that compares two 2-bit numbers in 2's complement form.